PRODUCT NUMBER

XXXXX-XYY H PLF

- LEAD FREE OPTION SEE NOTE 1,13
- SPECIAL OPTIONS SEE NOTE 1 OR 10
- HIGH TEMPERATURE PLASTIC SEE NOTE 1
- NO OF POSITIONS SEE NOTE 1
- PIN PLATING SEE SHEET 2
- BASE PART NO.

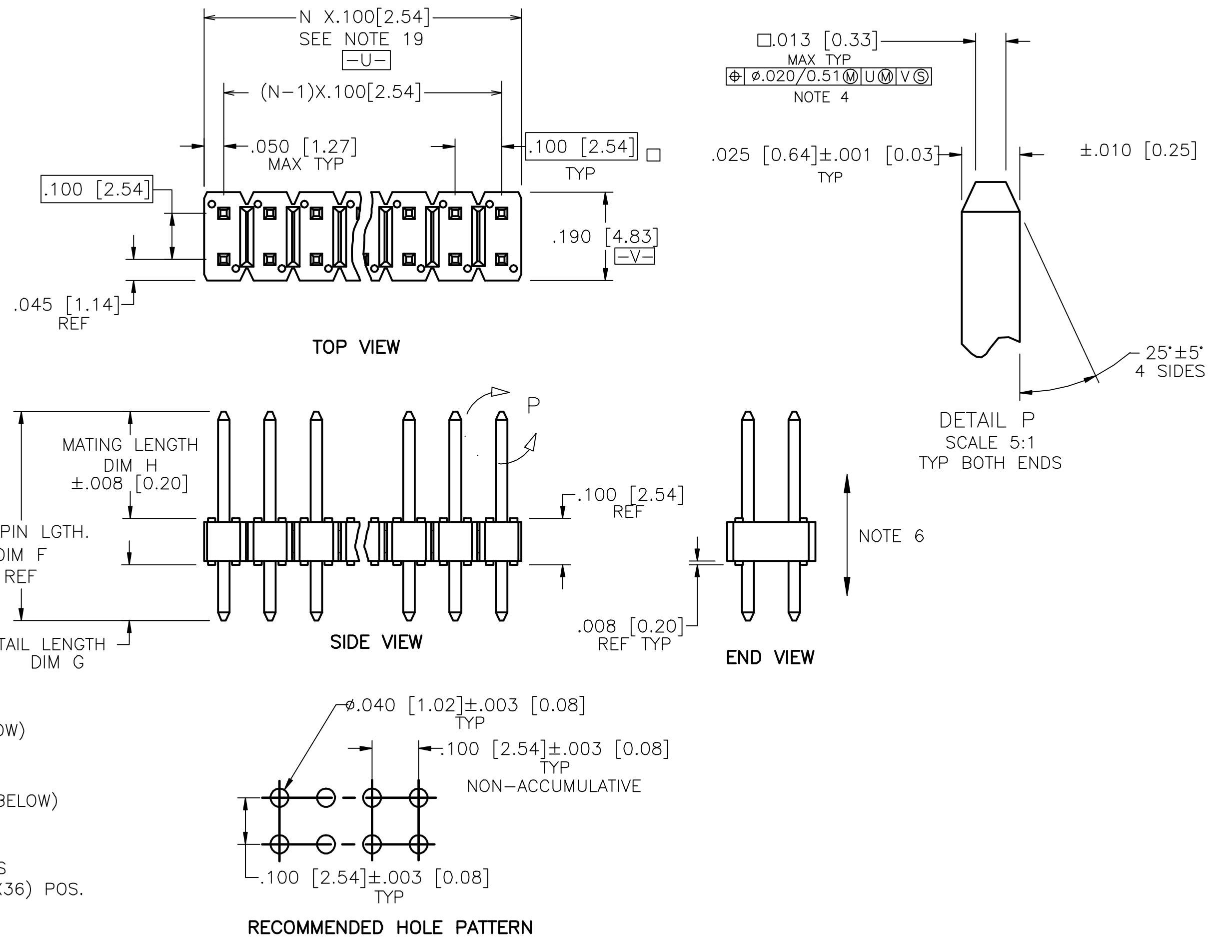

67996-X XX-XXX XXX LF

- TAIL LENGTH (EXAMPLE BELOW) **3.0mm=030 12.8mm=128 (SEE NOTE 16 & 17)**
- MATTING LENGTH (EXAMPLE BELOW) 5.0mm=050 25.5mm=255 (SEE NOTE 16 & 17)
- TOTAL NUMBER OF POSITIONS FROM 2 (2X1) THRU 72 (2X36) POS.
- PIN PLATING (SEE NOTE 14) 1=0.76µm Au 4= PURE TIN 8=0.36µm Au
- BASE PART NO. DOUBLE ROW

ltr	ecn no	dr	date
CW	M06-0268	MHT	7/17/06
CX	M06-0346	MHT	9/04/06
CY	M06-0468	MHT	11/27/06
DA	M08-0169	MHT	2/20/08
DB	M08-0272	MHT	9/25/08
DC	M08-0331	MHT	12/01/08
DD	M09-0105	MHT	7/10/09

mat'l. code: SEE NOTES 2 & 3

surface: ISO 1302

tolerance: ISO 406, ISO 1101 — tolerances unless otherwise specified: angles 0°±2°; linear .XX±.01/X±0.3, .XXX±.005/.XX±0.13, .XXXX±.0020/.XXX±0.051

projection; INCH/MM; scale 1:1

dr	T.BREWBAKER	12/21/94
engr	T.HANNA	12/21/94
chr	J.MURPHY	12/21/94
appd	T.HANNA	12/21/94

product family: BERGSTIK

title: BERGSTIK®II HDR. D/R .100/2.54cc STRAIGHT

dwg no: 67996 — sheet 1 of 8 — size A3

type: Product Customer Drawing

sheet index	revision	DD	DD	DD	DD	DD	DD	DD	DD
	sheet	1	2	3	4	5	6	7	8

FCIconnect.com
Copyright FCI
form A3

PIN PLATING CODES:

XXXXX–1YY	**30u"/0.76u MIN (SEE NOTE 14) OVER 50u"/1.27u MIN Ni**
XXXXX–2YY	**15u"/0.38u MIN (SEE NOTE 14) OVER 50u"/1.27u MIN Ni**
XXXXX–3YY	50u"/1.27u MIN Au OVER 50u"/1.27u MIN Ni
XXXXX–4YY	100u"/2.54u **MIN Sn OVER 50u"/1.27u MIN Ni (SEE NOTE 15)**
XXXXX–4YYHLF	
XXXXX–5YY	15u"/0.38u **MIN (SEE NOTE 14) OVER** 50u"/1.27u MIN Ni
XXXXX–6YY	30u"/0.76u **MIN (SEE NOTE 14) OVER** 50u"/1.27u MIN Ni
XXXXX–7YY	30u"/0.76u MIN Au OVER 50u"/1.27u MIN Ni
XXXXX–8YY	15u"/0.38u MIN Au OVER 50u"/1.27u MIN Ni
XXXXX–9YY	15u"/0.38u MIN GXT OVER 50u"/1.27u MIN Ni
XXXXX–0YY	30u"/0.76u MIN GXT OVER 50u"/1.27u MIN Ni

NOTES

(1.) PART NUMBER OPTIONS:

PIN PLATING CODES (SEE ABOVE)

HIGH TEMPERATURE MATERIAL:

PART NUMBERS WITH AND WITHOUT "H" WILL BE SUPPLIED WITH HIGH TEMPERATURE PLASTIC.

NUMBER OF POSITIONS :

EVEN NUMBER OF POSITIONS FROM 2 (2X1) THROUGH 72 (2X36).
–X00H INDICATES BERGSTRIP PRODUCT. SEE PAGE 3 FOR SPECIAL GEOMETRY OF THIS CONTINUOUS STRIP PRODUCT.
AUTOMATED REELS WILL CONTAIN 45,000 PINS.
SEE SPECIFIC PART NUMBERS FOR AVAILABILITY.

PACKAGING:

PACKAGED IN POLY BAGS.
EIGHT DIGIT PART NUMBERS FOLLOWED BY A "T" ARE PACKAGED IN TUBES. SEE SPECIFIC PART NUMBERS FOR AVAILABILITY.
EIGHT DIGIT PART NUMBERS FOLLOWED BY A "G" ARE PACKAGED IN GPAX FOR IBM ONLY. SEE SPECIFIC PART NUMBERS FOR AVAILABILITY.

PART NUMBERS FOLLOWED BY A "C" ARE PACKAGED IN TUBES WITH A PICKUP CAP APPLIED.

LEAD FREE:

ADD "HLF" SUFFIX AT THE END OF PART NUMBER FOR LEAD FREE OPTION, NOT AVAILABLE FOR –5YY,–5YYH, –6YY & –6YYH

(2.) BODY MATERIAL:

BODY MATERIAL : MANUFACTURER'S OPTION OF NYLON, PCT GLASS FIBER REINFORCED OR MINERAL FILLED LCP FLAME RETARDENT PER UL–94V–0.
COLOR: BLACK

BERGSTRIP™ PRODUCED WITH HIGH TEMPERATURE LCP THERMOPLASTIC, FLAME RETARDENT PER UL–94V–0.
COLOR: BLACK

PART NUMBERS WITH "H" AND WITHOUT SUFFIX WILL WITHSTAND EXPOSURE TO 260° C PEAK TEMPERATURE FOR 20 SECONDS IN WAVE SOLDER, INFRA–RED OR VAPOR PHASE SOLDER PROCESS.

(3.) PIN MATERIAL: PHOS BRONZE.

(4.) MEASURED WITH PART IN RESTRAINED CONDITION.

5. TWO SIDES OF PIN TIPS NOT PLATED. TYPICAL BOTH ENDS.

(6.) 2LBS/0.9KG MIN PIN RETENTION IN EITHER DIRECTION.

7. MILITARY BERGSTIK HEADER P/N XXXXX–XYY–MIL NOT AVAILABLE.

(8.) ±.010/0.25 TOL APPLIES TO ALL "G" TAILS EXCEPT INDICATED PARTS ON TABLE WHERE +.010/0.25 –.000/0.00 APPLIES.

(9.) NOTCH CONFIGURATION WILL VARY PER VENDOR'S DISCRETION.

(10) BERGSTRIP™ PART NUMBERS FOLLOWED BY BY A "B" ARE BULK PRICED.

(11) TAIL LENGTH (DIM. G) TO BE ±.008/.0.20.

12. POSITIONS PER ROW 37 TO 50 CAN BE PRODUCED, BUT FLATNESS AND CURVATURE MAY NOT BE HELD AS CLOSE AS 36 POSITIONS.

(13) THESE PRODUCTS MEETS EUROPEAN UNION DIRECTIVES AND OTHER COUNTRY REGULATION AS DESCRIBED IN GS–22–008.

(14) PLATING OPTIONS:
MAY BE EITHER GOLD OR GXT PLATED AT MANUFACTURER'S OPTION.

(15) "THIS PRODUCT HAS 100% TIN PLATING IN THE INTERFACE AND HAS NOT BEEN TESTED FOR WHISKER GROWTH IN ALL INTERCONNECT ENVIRONMENTS."

(16) THE OAL DON'T EXCEED 34.5mm

(17) INCREMENTS BY 0.1mm IN LENGTHS ONLY

18. FOR SPECIAL PACKAGING REQUEST PLEASE CONTACT PRODUCT MANAGER FOR AVAILABILITY

(19) TO DETERMINE DIMENSIONS:
N=NUMBER OF POSITION PER ROW
EXAMPLE: 10 POS. N X .100/2.54

mat'l. code: SEE NOTES 2 & 3	surface: ISO 1302	tolerance: ISO 406, ISO 1101	projection	product family: BERGSTIK	
ltr / ecn no / dr / date	tolerances unless otherwise specified			title	
DD	angles 0°±2°	linear .XX±.01/.X±0.3, .XXX±.005/.XX±0.13, .XXXX±.0020/.XXX±0.051	INCH/MM, scale 1:1	BERGSTIK II HDR. D/R .100/2.54cc STRAIGHT	
	dr T.BREWBAKER 12/21/94			dwg no 67996	sheet 2 of 8, size A3
	engr T.HANNA 12/21/94				
	chr J.MURPHY 12/21/94				
	appd T.HANNA 12/21/94			type Product Customer Drawing	

sheet index / revision sheet

FCI FCIconnect.com
Copyright FCI
form A3

BERGSTRIP™ HEADER

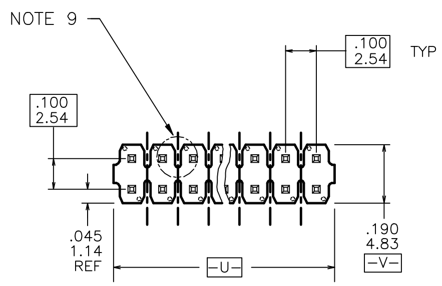

DOUBLE ROW TOP VIEW

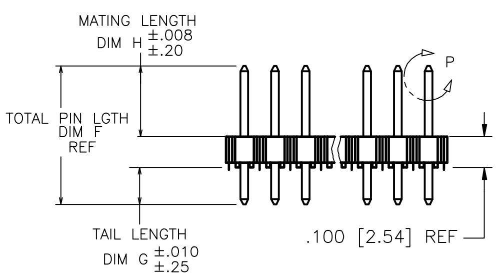

DOUBLE ROW
SIDE VIEW

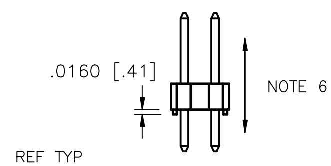

END VIEW
DOUBLE ROW

REEL PACKING DIMENSIONS

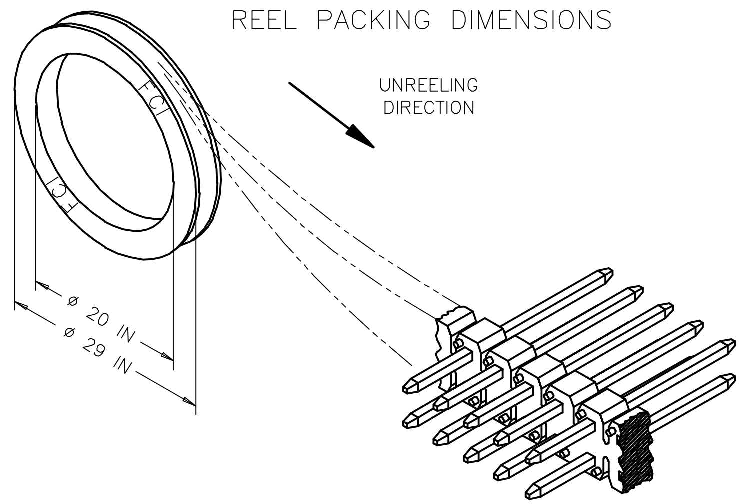

mat'l. code SEE NOTES 2 & 3	surface ISO 1302 √	tolerance ISO 406 ISO 1101	projection	product family BERGSTIK
ltr / ecn no / dr / date	tolerances unless otherwise specified			title
DD	angles 0°±2°	linear .XX±.01/.X±0.3 .XXX±.005/.XX±0.13 .XXXX±.0020/.XXX±0.051	INCH/MM scale 1:1	BERGSTIK II HDR. D/R .100/2.54cc STRAIGHT
	dr T.BREWBAKER 12/21/94			dwg no 67996 sheet 3 of 8 size A3
	engr T.HANNA 12/21/94			
	chr J.MURPHY 12/21/94			
	appd T.HANNA 12/21/94			type Product Customer Drawing
sheet index	revision sheet			

form: A3

Copyright FCI
FCIconnect.com

PRODUCT NUMBER	TOT. PIN LGTH.		TAIL LENGTH		MATING LENGTH				BERGSTRIP ™	LF
	DIM F	DIM F	DIM G	DIM G	DIM H	DIM H	PACKAGING	NOTES	AVAILABLE	OPTION
	ENGLISH	METRIC	ENGLISH	METRIC	ENGLISH	METRIC				
55005-XYYH	0.597	15.16	0.095	2.41	0.402	10.21	POLY BAGS	–	YES	NOTE 1,13
55030-XYYH	0.630	16.00	0.150	3.81	0.380	9.65	POLY BAGS	–	YES	
67996-XYY	0.425	10.80	0.095	2.41	0.230	5.84	POLY BAGS/TUBES	–	YES	
67997-XYY	0.450	11.43	0.120	3.05	0.230	5.84	POLY BAGS/TUBES	–	YES	
67997-XYYH	0.450	11.43	0.120	3.05	0.230	5.84	POLY BAGS/TUBES	–	YES	
67998-XYY	0.525	13.34	0.107	2.72	0.318	8.08	POLY BAGS/TUBES	–	YES	
67999-XYY	0.548	13.92	0.130	3.30	0.318	8.08	POLY BAGS	–	NO	
68438-XYY	0.555	14.10	0.225	5.72	0.230	5.84	POLY BAGS/TUBES	–	NO	
68439-XYY	0.720	18.29	0.120	3.05	0.500	12.70	POLY BAGS	–	NO	
68464-XYY	0.650	16.51	0.120	3.05	0.430	10.92	POLY BAGS/TUBES	–	NO	
68481-XYY	0.480	12.19	0.095	2.41	0.285	7.24	POLY BAGS/TUBES	–	NO	
68482-XYY	0.938	23.83	0.318	8.08	0.520	13.21	POLY BAGS	–	NO	
68491-XYY	0.475	12.07	0.120	3.05	0.255	6.48	POLY BAGS/TUBES	–	NO	
68600-XYY	0.825	20.96	0.115	2.92	0.610	15.49	POLY BAGS	–	NO	
68601-XYY	0.620	15.75	0.120	3.05	0.400	10.16	POLY BAGS	–	NO	
68602-XYY	0.480	12.19	0.150	3.81	0.230	5.84	POLY BAGS	–	NO	
68690-XYY	0.533	13.54	0.115	2.92	0.318	8.08	POLY BAGS	–	NO	
68691-XYY	0.538	13.67	0.120	3.05	0.318	8.08	POLY BAGS	–	YES	
68692-XYY	0.430	10.92	0.100	2.54	0.230	5.84	POLY BAGS	–	NO	
68693-XYY	0.938	23.83	0.520	13.21	0.318	8.08	POLY BAGS	–	NO	
68716-XYY	0.828	21.03	0.410	10.41	0.318	8.08	POLY BAGS	–	NO	
68734-XYY	0.615	15.62	0.230	5.84	0.285	7.24	POLY BAGS	–	NO	
68737-XYY	0.440	11.18	0.110	2.79	0.230	5.84	POLY BAGS	–	YES	
68738-XYY	0.615	15.62	0.115	2.92	0.400	10.16	POLY BAGS	–	NO	
68739-XYY	0.486	12.34	0.156	3.96	0.230	5.84	POLY BAGS	–	NO	
68743-XYY	0.638	16.21	0.220	5.59	0.318	8.08	POLY BAGS	–	NO	
68749-XYY	0.838	21.29	0.420	10.67	0.318	8.08	POLY BAGS	–	NO	
68779-XYY	0.736	18.69	0.318	8.08	0.318	8.08	POLY BAGS	–	NO	
68783-XYY	0.375	9.53	0.045	1.14	0.230	5.84	POLY BAGS	–	NO	
68799-XYY	0.925	23.50	0.595	15.11	0.230	5.84	POLY BAGS	–	NO	NOTE 1,13

mat'l code: SEE NOTES 2 & 3

ltr	ecn no	dr	date
DD			

surface: ISO 1302 | tolerance: ISO 406, ISO 1101

tolerances unless otherwise specified

angles: 0°±2° | linear: .XX±.01/.X±0.3; .XXX±.005/.XX±0.13; .XXXX±.0020/.XXX±0.051

projection | INCH/MM | scale 1:1

dr	T.BREWBAKER	12/21/94
engr	T.HANNA	12/21/94
chr	J.MURPHY	12/21/94
appd	T.HANNA	12/21/94

sheet index | revision sheet

product family: BERGSTIK

title: BERGSTIK II HDR. D/R .100/2.54cc STRAIGHT

dwg no: 67996 | sheet 4 of 8 | size A3

type: Product Customer Drawing

form: A3

FCIconnect.com

Copyright FCI

PDM: Rev:DD STATUS:Released Printed: Dec 01, 2010

PRODUCT NUMBER	TOT. PIN LGTH.		TAIL LENGTH		MATING LENGTH				BERGSTRIP™	LF
	DIM F	DIM F	DIM G	DIM G	DIM H	DIM H	PACKAGING	NOTES	AVAILABLE	OPTION
	ENGLISH	METRIC	ENGLISH	METRIC	ENGLISH	METRIC				
69132-XYY	0.760	19.30	0.120	3.05	0.540	13.72	POLY BAGS/TUBES	–	NO	NOTE 1,13
69133-XYY	0.615	15.62	0.285	7.24	0.230	5.84	POLY BAGS	–	NO	
69157-XYY	0.410	10.41	0.110	2.79	0.200	5.08	POLY BAGS	–	NO	
71217-XYYH	1.000	25.40	0.450	11.43	0.450	11.43	POLY BAGS	–	NO	
71222-XYYH	0.850	21.59	0.250	6.35	0.500	12.70	POLY BAGS	–	NO	
72273-XYYH	0.725	18.42	0.110	2.79	0.515	13.08	POLY BAGS	–	NO	
72448-XYYH	0.658	16.71	0.172	4.37	0.386	9.80	POLY BAGS	–	NO	
72455-XYYH	0.598	15.19	0.180	4.57	0.318	8.08	POLY BAGS	–	NO	
72455-632HG	0.598	15.19	0.180	4.57	0.318	8.08	GPAX	NOTE 1	NO	
73503-XYYH	0.420	10.67	0.120	3.05	0.200	5.08	POLY BAGS	–	NO	
73596-XYYH	0.795	20.19	0.110	2.79	0.585	14.86	POLY BAGS	–	NO	
74317-XYYH	0.532	13.51	0.309	7.85	0.123	3.12	POLY BAGS	NOTE 11	NO	
74318-XYYH	0.592	15.04	0.369	9.37	0.123	3.12	POLY BAGS	NOTE 11	NO	
74999-XYYH	0.508	12.90	0.090	2.29	0.318	8.08	POLY BAGS	–	NO	
78212-XYY	0.710	18.03	0.350	8.89	0.260	6.60	POLY BAGS	–	NO	
78233-XYY	0.568	14.43	0.150	3.81	0.318	8.08	POLY BAGS	–	NO	
78269-XYY	0.385	9.78	0.095	2.41	0.190	4.83	POLY BAGS	–	NO	
78286-XYY	0.500	12.70	0.160	4.06	0.240	6.10	POLY BAGS/TUBES	–	NO	
78932-XYY	UNAVAILABLE		UNAVAILABLE		UNAVAILABLE			–	–	
78933-XYY	0.695	17.65	0.285	7.24	0.310	7.87	POLY BAGS	–	NO	
78988-XYY	0.540	13.72	0.135	3.43	0.305	7.75	POLY BAGS	–	NO	
78989-XYY	UNAVAILABLE		UNAVAILABLE		UNAVAILABLE			–	–	
78990-XYY	UNAVAILABLE		UNAVAILABLE		UNAVAILABLE			–	–	
78991-XYY	UNAVAILABLE		UNAVAILABLE		UNAVAILABLE			–	–	
78992-XYY	UNAVAILABLE		UNAVAILABLE		UNAVAILABLE			–	–	
78993-XYY	UNAVAILABLE		UNAVAILABLE		UNAVAILABLE			–	–	
78994-XYY	UNAVAILABLE		UNAVAILABLE		UNAVAILABLE			–	–	NOTE 1,13

FCIconnect.com
Copyright FCI

mat'l code: SEE NOTES 2 & 3
surface: ISO 1302
tolerance: ISO 406, ISO 1101
tolerances unless otherwise specified
angles: 0°±2'
linear: .XX±.01/.X±0.3; .XXX±.005/.XX±0.13; .XXXX±.0020/.XXX±0.051
projection
INCH/MM
scale 1:1

ltr	ecn no	dr	date
DD			

dr	T.BREWBAKER	12/21/94
engr	T.HANNA	12/21/94
chr	J.MURPHY	12/21/94
appd	T.HANNA	12/21/94

sheet index | revision sheet

product family: BERGSTIK
title: BERGSTIK®II HDR. D/R .100/2.54cc STRAIGHT
dwg no: 67996
sheet 5 of 8
size: A3
type: Product Customer Drawing

form: A3

PDM: Rev:DD STATUS:Released Printed: Dec 01, 2010

PRODUCT NUMBER	TOT. PIN LGTH.		TAIL LENGTH		MATING LENGTH				BERGSTRIP™	LF
	DIM F	DIM F	DIM G	DIM G	DIM H	DIM H	PACKAGING	NOTES	AVAILABLE	OPTION
	ENGLISH	METRIC	ENGLISH	METRIC	ENGLISH	METRIC				
78995–XYY	UNAVAILABLE		UNAVAILABLE		UNAVAILABLE			–	–	NOTE 1,13
78996–XYY	UNAVAILABLE		UNAVAILABLE		UNAVAILABLE			–	–	
79242–XYY	0.930	23.62	0.340	8.64	0.490	12.45	POLY BAGS	–	NO	
79243–XYY	1.230	31.24	0.390	9.91	0.740	18.80	POLY BAGS	–	NO	
79244–XYY	UNAVAILABLE		UNAVAILABLE		UNAVAILABLE			–	–	
79268–XYY	1.020	25.91	0.120	3.05	0.800	20.32	POLY BAGS	–	NO	
79271–XYY	1.100	27.94	0.500	12.70	0.500	12.70	POLY BAGS	–	NO	
79425–XYY	0.410	10.41	0.120	3.05	0.190	4.83	POLY BAGS	–	NO	
79821–XYY	0.730	18.54	0.200	5.08	0.430	10.92	POLY BAGS	–	NO	
84610–XYYH	0.380	9.65	0.120	3.05	0.160	4.06	POLY BAGS	–	NO	
84760–XYYH	0.870	22.09	0.150	3.81	0.620	15.74	POLY BAGS	–	NO	
84784–XYYH	1.130	28.70	0.122	3.09	0.908	23.06	POLY BAGS	–	NO	
84934–XYYH	1.375	34.93	0.625	15.88	0.650	16.51	POLY BAGS	–	NO	
84976–XYYH	0.730	18.54	0.400	10.16	0.230	5.84	POLY BAGS	–	NO	
86503–XYY	0.470	11.94	0.120	3.05	0.250	6.35	POLY BAGS	–	NO	
86581–XYY	0.450	11.43	0.120	3.05	0.230	5.84	POLY BAGS	NOTE 8	NO	
86817–XYY	0.925	23.50	0.120	3.05	0.705	17.91	POLY BAGS	–	NO	
86827–XYY	0.700	17.78	0.120	3.05	0.480	12.19	POLY BAGS	–	NO	
86832–XYY	0.525	13.34	0.100	2.54	0.325	8.26	POLY BAGS	–	NO	
86834–XYY	1.335	33.91	0.585	14.86	0.650	16.51	POLY BAGS	–	NO	
86836–XYY	0.870	22.10	0.120	3.05	0.650	16.51	POLY BAGS	–	NO	
86837–XYY	0.600	15.24	0.120	3.05	0.380	9.65	POLY BAGS	–	NO	
87037–XYY	1.240	31.50	0.120	3.05	1.020	25.91	POLY BAGS	–	NO	
87052–XYY	0.990	25.15	0.120	3.05	0.770	19.56	POLY BAGS	–	NO	
87203–XYY	0.545	13.84	0.150	3.81	0.295	7.49	POLY BAGS	–	NO	
87344–XYY	1.375	34.93	0.219	5.56	1.056	26.82	POLY BAGS	–	NO	NOTE 1,13

mat'l. code SEE NOTES 2 & 3	surface ISO 1302	tolerance ISO 406 ISO 1101	projection	product family BERGSTIK	
ltr / ecn no / dr / date	tolerances unless otherwise specified			title	
DD	angles 0°±2° / linear	.XX±.01/.X±0.3 / .XXX±.005/.XX±0.13 / .XXXX±.0020/.XXX±0.051	INCH/MM	BERGSTIK® II HDR. D/R .100/2.54cc STRAIGHT	
			scale 1:1		
	dr	T.BREWBAKER	12/21/94	dwg no 67996	sheet 6 of 8 / size A3
	engr	T.HANNA	12/21/94		
	chr	J.MURPHY	12/21/94		
	appd	T.HANNA	12/21/94	type Product Customer Drawing	
sheet index	revision sheet				

form: A3

FCIconnect.com
Copyright FCI

PRODUCT NUMBER	TOT. PIN LGTH.		TAIL LENGTH		MATING LENGTH				BERGSTRIP™	LF
	DIM F	DIM F	DIM G	DIM G	DIM H	DIM H	PACKAGING	NOTES	AVAILABLE	OPTION
	ENGLISH	METRIC	ENGLISH	METRIC	ENGLISH	METRIC				
87345-XYY	1.218	30.94	0.406	10.31	0.712	18.08	POLY BAGS	–	NO	NOTE 1,13
87348-XYY	0.930	23.62	0.100	2.54	0.730	18.54	POLY BAGS	–	NO	
87349-XYY	0.890	22.61	0.110	2.79	0.680	17.27	POLY BAGS	–	NO	
87381-XYY	0.645	16.38	0.100	2.54	0.445	11.30	POLY BAGS	–	NO	
87382-XYY	0.675	17.15	0.100	2.54	0.475	12.07	POLY BAGS	–	NO	
87503-XYYH	0.630	16.00	0.110	2.79	0.420	10.67	POLY BAGS	–	NO	
87869-XYY	0.690	17.53	0.230	5.84	0.360	9.14	POLY BAGS	–	NO	
87894-XYY	0.588	14.94	0.170	4.32	0.318	8.08	POLY BAGS	–	NO	
87900-XYY	0.940	23.88	0.120	3.05	0.720	18.29	POLY BAGS	–	NO	
87901-XYY	1.040	26.42	0.120	3.05	0.820	20.83	POLY BAGS	–	NO	
87903-XYY	0.963	24.46	0.337	8.56	0.526	13.36	POLY BAGS	–	NO	
88797-XYY	0.950	24.13	0.320	8.13	0.530	13.46	POLY BAGS	–	NO	
88812-XYY	0.415	10.54	0.085	2.16	0.230	5.84	POLY BAGS/TUBES	NOTE 8	NO	
88886-XYY	1.306	33.17	0.276	7.01	0.930	23.62	POLY BAGS	–	NO	
89446-XYY	0.930	23.62	0.120	3.05	0.710	18.03	POLY BAGS	–	NO	
89540-XYY	0.760	19.30	0.280	7.11	0.380	9.65	POLY BAGS	–	NO	
89542-XYY	1.065	27.05	0.125	3.18	0.840	21.34	POLY BAGS	–	NO	
89639-XYY	1.260	32.00	0.118	3.00	1.042	26.47	POLY BAGS	–	NO	
91828-XYY	0.450	11.43	0.120	3.05	0.230	5.84	TUBES	–	NO	
92417-XYY	0.530	13.46	0.110	2.79	0.320	8.13	POLY BAGS	–	NO	
93216-XYYH	0.573	14.55	0.155	3.94	0.318	8.08	POLY BAGS/TUBES	–	NO	
93216-632HG	0.573	14.55	0.155	3.94	0.318	8.08	GPAX	NOTE 1	NO	
93217-XYYH	0.395	10.03	0.095	2.41	0.200	5.08	POLY BAGS	–	NO	
93254-XYY	0.563	14.30	0.110	2.79	0.353	8.97	POLY BAGS	–	NO	NOTE 1,13

mat'l code: SEE NOTES 2 & 3
surface: ISO 1302
tolerance: ISO 406, ISO 1101
tolerances unless otherwise specified
angles: 0°±2°
linear: .XX±.01/.X±0.3, .XXX±.005/.XX±0.13, .XXXX±.0020/.XXX±0.051
projection
INCH/MM
scale 1:1

ltr	ecn no	dr	date
DD			

dr	T.BREWBAKER	12/21/94
engr	T.HANNA	12/21/94
chr	J.MURPHY	12/21/94
appd	T.HANNA	12/21/94

sheet index | revision sheet

product family: BERGSTIK
title: BERGSTIK®II HDR. D/R .100/2.54cc STRAIGHT
dwg no: 67996
sheet 7 of 8
size: A3
type: Product Customer Drawing

form: A3

FCIconnect.com
Copyright FCI

PRODUCT NUMBER	TOT. PIN LGTH.		TAIL LENGTH		MATING LENGTH				BERGSTRIP™	LF
	DIM F	DIM F	DIM G	DIM G	DIM H	DIM H	PACKAGING	NOTES	AVAILABLE	OPTION
	ENGLISH	METRIC	ENGLISH	METRIC	ENGLISH	METRIC				
94010-XYYH	0.756	19.20	0.350	8.89	0.306	7.77	POLY BAGS	–	NO	NOTE 1,13
94532-XYYH	1.250	31.75	0.450	11.43	0.700	17.78	POLY BAGS	–	NO	
95105-XYY	0.370	9.40	0.126	3.20	0.144	3.66	POLY BAGS	–	NO	
95645-XYYH	0.350	8.89	0.100	2.54	0.150	3.81	POLY BAGS	–	NO	
95652-XYYH	0.500	12.70	0.070	1.78	0.330	8.38	POLY BAGS	–	NO	
95665-XYYH	0.835	21.21	0.335	8.51	0.400	10.16	POLY BAGS	–	NO	
95687-XYYH	0.820	20.83	0.360	9.14	0.360	9.14	POLY BAGS	–	NO	
95712-XYYH	1.090	27.69	0.110	2.79	0.880	22.35	POLY BAGS	–	NO	
95727-XYYH	0.825	20.96	0.110	2.79	0.615	15.62	POLY BAGS	–	NO	
98181-XYYH	0.760	19.30	0.218	5.54	0.442	11.23	POLY BAGS	–	NO	
98217-XYYH	0.756	19.20	0.328	8.33	0.328	8.33	POLY BAGS	–	NO	
98329-XYYH	0.930	23.62	0.415	10.54	0.415	10.54	POLY BAGS	–	NO	
98854-XYYH	0.450	11.43	0.120	3.05	0.230	5.84	TUBES	–	NO	
10017852-XYYH	0.450	11.43	0.125	3.18	0.225	5.72	POLYBAGS	–	NO	
10074747-XYYH	0.850	21.59	0.520	13.21	0.230	5.84	POLYBAGS	–	NO	NOTE 1,13

FCIconnect.com

Copyright FCI

mat'l code: SEE NOTES 2 & 3

surface: ISO 1302

tolerance: ISO 406, ISO 1101

tolerances unless otherwise specified: angles 0° ±2°; linear .XX±.01/.X±0.3, .XXX±.005/.XX±0.13, .XXXX±.0020/.XXX±0.051

projection: INCH/MM

scale 1:1

ltr	ecn no	dr	date
DD			

dr	T.BREWBAKER	12/21/94
engr	T.HANNA	12/21/94
chr	J.MURPHY	12/21/94
appd	T.HANNA	12/21/94

sheet index | revision sheet

product family: BERGSTIK

title: BERGSTIK II HDR. D/R .100/2.54cc® STRAIGHT

dwg no 67996 | sheet 8 of 8 | size A3

type: Product Customer Drawing

form: A3