REV.	DATE	DESCRIPTION
A	02/27/00	REVISE O-RING GROOVE
B	04/22/00	ADD DUROMETER RATING
C	06/28/06	UPDATE DRAWING FORMAT

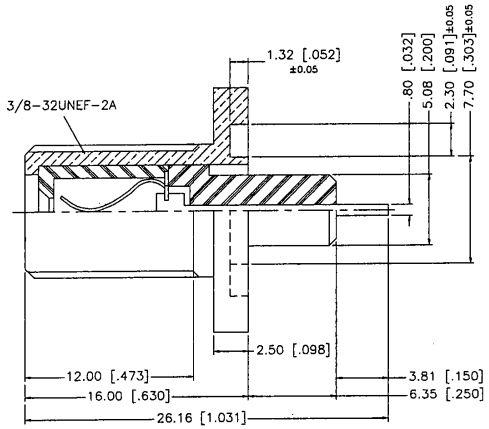

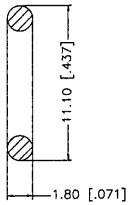

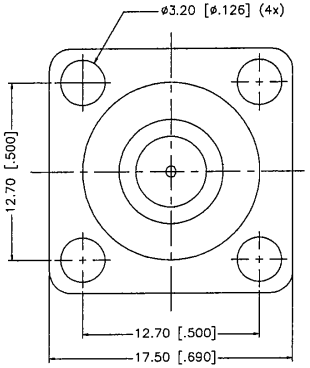

	DESCRIPTION	MATERIAL	FINISH	QTY
8				
7				
6				
5				
4	GASKET	SILICONE - 70 SHORE	RED	1
3	CONTACT PIN	BRASS	BRIGHT TIN	1
2	INSULATOR	TEFLON	NATURAL	2
1	BODY	BRASS	NICKEL	1

UNLESS OTHERWISE SPECIFIED DIMENSIONS ARE IN MILLIMETERS. DIMENSIONS IN ( ) ARE IN INCHES AND FOR CUSTOMER REFERANCE ONLY.

UNLESS OTHERWISE SPECIFIED TOLERANCES FOR MILLIMETERS ARE:
0.5 - 8mm ± 0.20mm
8 - 30mm ± 0.40mm
30 - 120mm ± 0.50mm

UNLESS OTHERWISE SPECIFIED TOLERANCES FOR INCHES ARE:
.020 - .315 = ± 0.007"
.315 - 1.180 = ± 0.015"
1.180 - 4.724 = ± 0.020"

DO NOT SCALE DRAWING

APPROVALS		DATE
DRAWN	G.R.S.	06/28/06
CHECKED		
ISSUED		
SHEET	1 OF 1	
CAD FILE	C:/222/222146.DWG	

Amphenol Connex

PART DESCRIPTION: F PANEL RECEPTACLE - 4 HOLE

PART NO. 222146

DWG. NO. 222146.DWG | REV. C | SIZE A | SCALE NA